ISO FULL BLEED A3 420 X 297 MM
PRINTED ON ___% POST-CONSUMER RECYCLED CONTENT PAPER

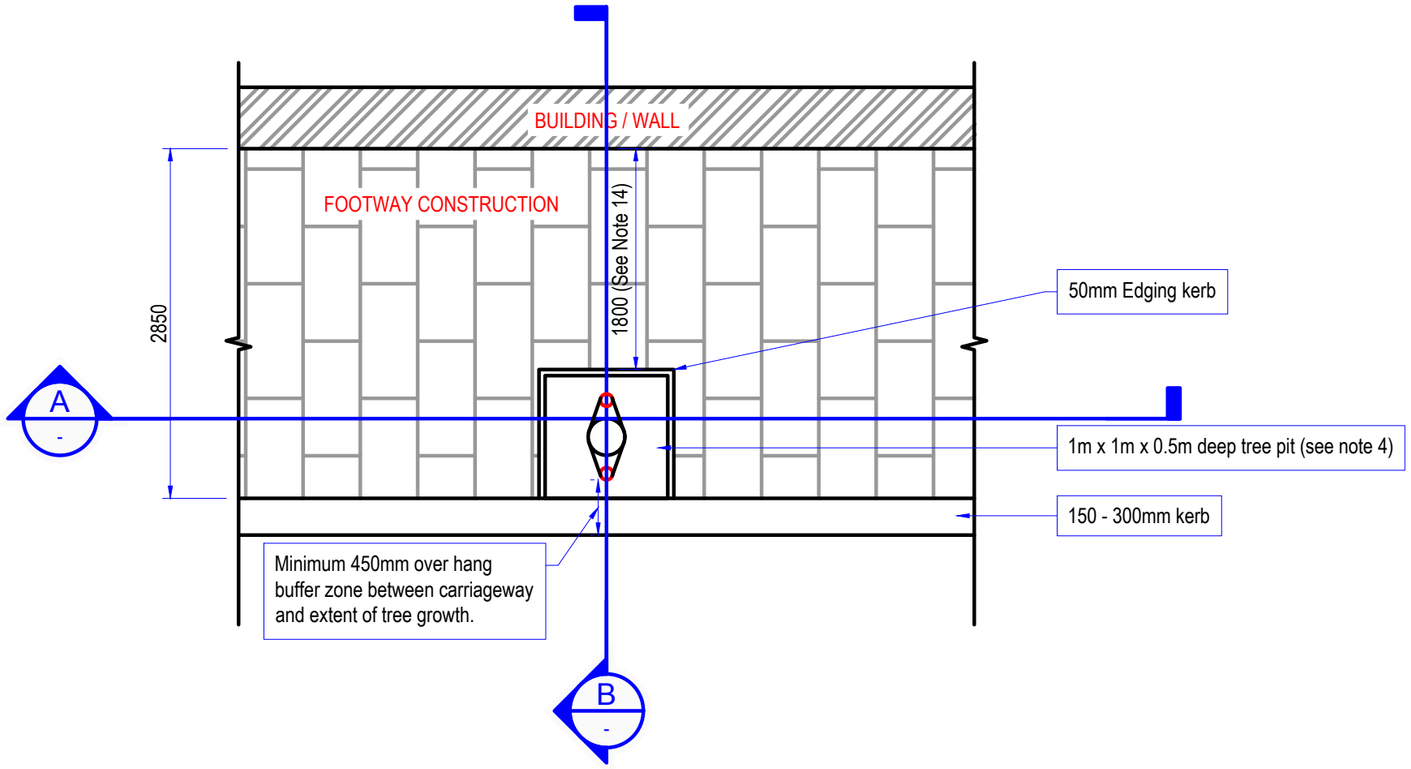

TREE PIT PLAN

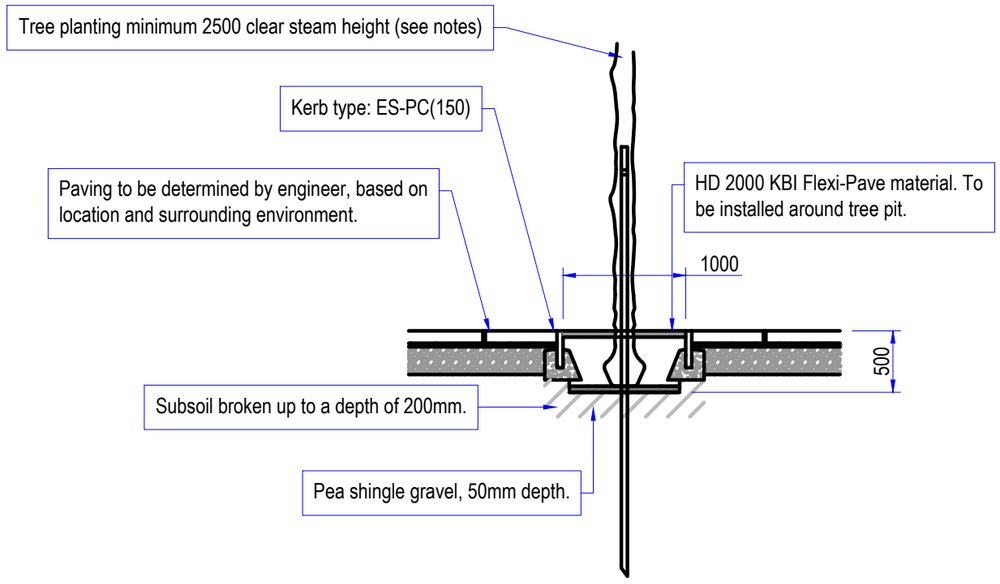

TREE PIT SECTION A-A

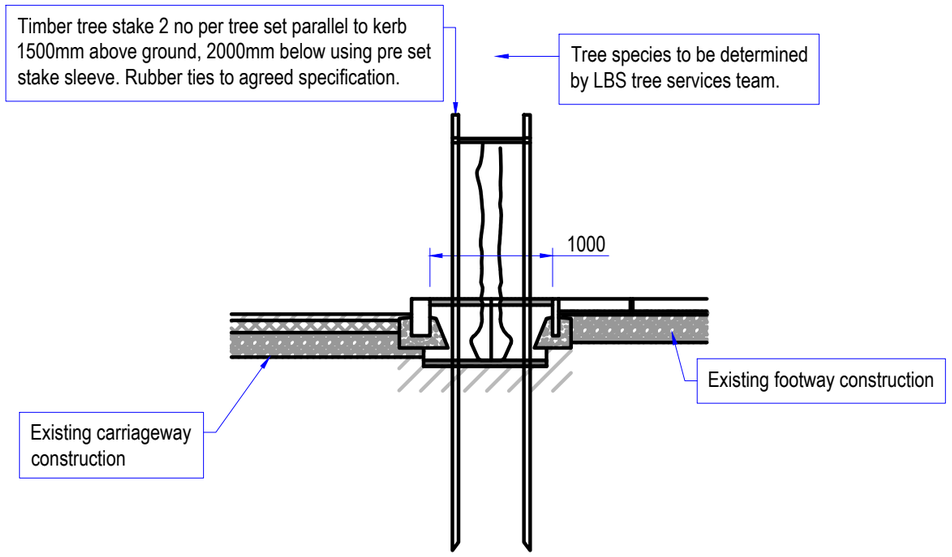

TREE PIT SECTION B-B

NOTES

1. All dimensions are in millimeters unless otherwise stated.
2. Do not scale from this drawing. Use only written dimensions.
3. Tree species to be confirmed with LBS tree services team.
4. The depth of tree pits to be reduced to a minimum depth of 450mm subject to approval from Southwark Council
5. Tree stock size - extra heavy standard.
   5.1. Girth size, 200 - 250mm.
   5.2. Clear stem height minimum 2500mm.
   5.3. Root balled at 750mm or container.
   5.4. Grown with 2 No. Pre set stake sleeve.
6. All tree stock to be approved by TFL representative landscape architect.
7. Tree planting to be carried out by approved landscape sub-contractor.
8. Tree planting contractor to hand dig appropriate size hole in previously compacted urban tree soil to accommodate tree rootball.
9. Trees to be staked with 2 No. 3500mm pressure treated softwood stake set 1500mm above ground.
10. Trees fixed to stake with rubber ties to be agreed with supervising landscape architect.
11. Tree pits to be placed a minimum of 2m from utility apparatus.
12. Tree pit dimensions to be achieved subject to utility constraints.
13. The ideal size for a tree pit is 1m² (1m x 1m) as the footway gets narrower it becomes harder to fit a 1m x 1m tree pit into the footway, in order to retain the 1m² within a narrow footway the tree pit can be oblong in shape i.e 0.5m x 2m.
14. Footway absolute minimum is 1.2m , dependant on pedestrian volumes, to be agreed with approving officer.

REV	DATE	REVISION DESCRIPTION / DETAILS	DRN BY	CHKD BY	APRVD BY

Southwark Council
southwark.gov.uk
160 TOOLEY STREET LONDON SE1P 5LX

PROJECT:
SOUTHWARK STREETSCAPE
DESIGN MANUAL
STANDARD DETAILS

TITLE:
TREE PIT - TYPE C
EDGING KERB

STATUS: DRAFT		DRAWN	SR
		DESIGNED	GL
SCALE: 1:50 [A3]		CHECKED	-
		APPROVED	-
DRAWING NO: LBS/2600/03		REV: -	
DATE DRAWN: OCTOBER 2017	DATE ISSUED: 28 Feb 2019		

S:\MIGHTWATS\MAINTENANCE\ASSOR\ASSOR_WORK\NEW - ARCHIVE\REVISION OF - SSOM\TECH PAT\ISSUE\ES-3000 LANDSCAPING\DES-2600\0104 TREE PIT.DWG