ISO FULL BLEED A3 420 X 297 MM

PRINTED ON ___% POST-CONSUMER RECYCLED CONTENT PAPER

KEYWAYS:

Open

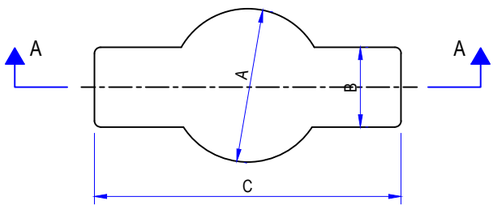

PLAN

Closed

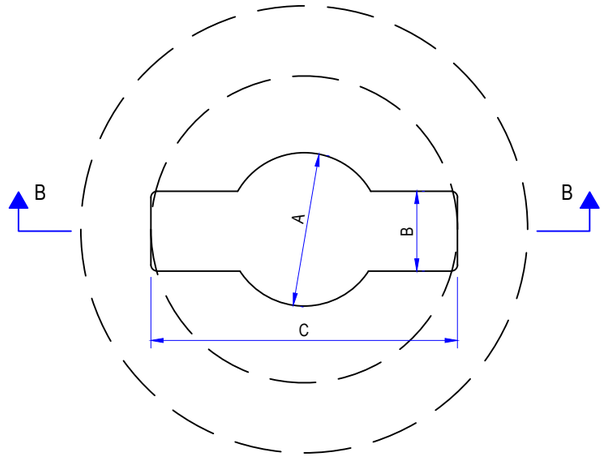

PLAN

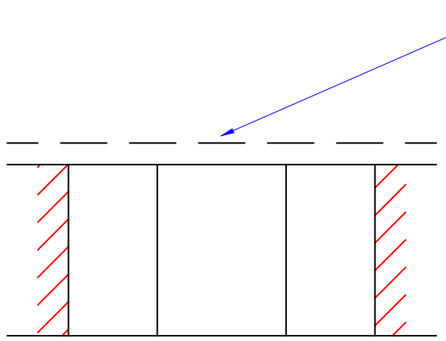

SECTION A-A

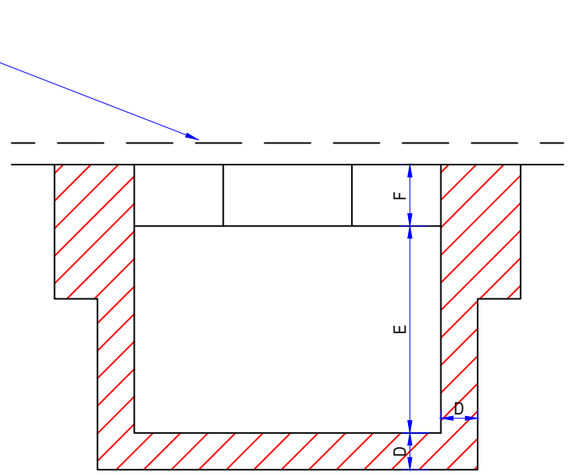

SECTION B-B

KEYS:

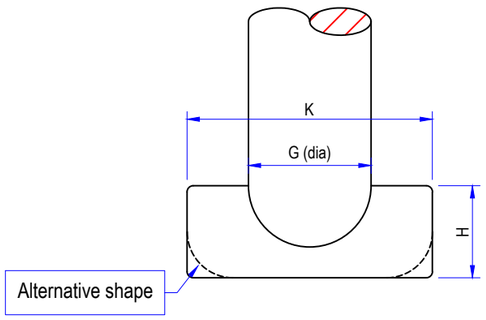

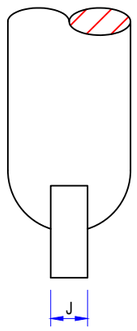

Type	Keyway							Key			
	A	B	C	D	E	F		G	H	J	K
Small	min./max.	min./max.	min.	min.	min.	min.					
	14-16	9-11	29	6	17	6		12	12	6	25
Large	22-25	9-13	44	6	35	10		20	15	6	40

All dimensions in millimeters

NOTE: Small key for class B125 and kerb-type gully tops; large key for class D400 and class C250

NOTES

1. ALL DIMENSIONS ARE IN MILLIMETERS.
2. Blocks to be made of pressed concrete to BS EN 1340

REV	DATE	REVISION DESCRIPTION / DETAILS	DRN BY	CHKD BY	APRVD BY

Southwark Council
southwark.gov.uk
160 TOOLEY STREET LONDON SE1P 5LX

PROJECT:
SOUTHWARK STREETSCAPE
DESIGN MANUAL
STANDARD DETAILS

TITLE:
DETAIL OF KEYWAYS AND KEYS FOR MANHOLE TOPS AND KERB TYPE GULLY TOPS

STATUS: DRAFT		DRAWN	SR
		DESIGNED	-
SCALE: N.T.S.		CHECKED	GL
		APPROVED	-
DRAWING NO: LBS/500/16		REV: R0	
DATE DRAWN: JULY 2017	DATE ISSUED: 19 Feb 2019		

S:\HIGHWAYS MAINTENANCE\SSDM\02-SSDM_CONTENT_ARCHIVE\REVISION OF SSDM\TECH DRWGS\TO DETAILS\SERIES 500 DRAINAGE & SERVICE DUCTS\DWG\LBS-500-16 DETAIL KEYWAYS AND KEYS.DWG