ISO FULL BLEED A3 420 X 297 MM
PRINTED ON ___% POST-CONSUMER RECYCLED CONTENT PAPER

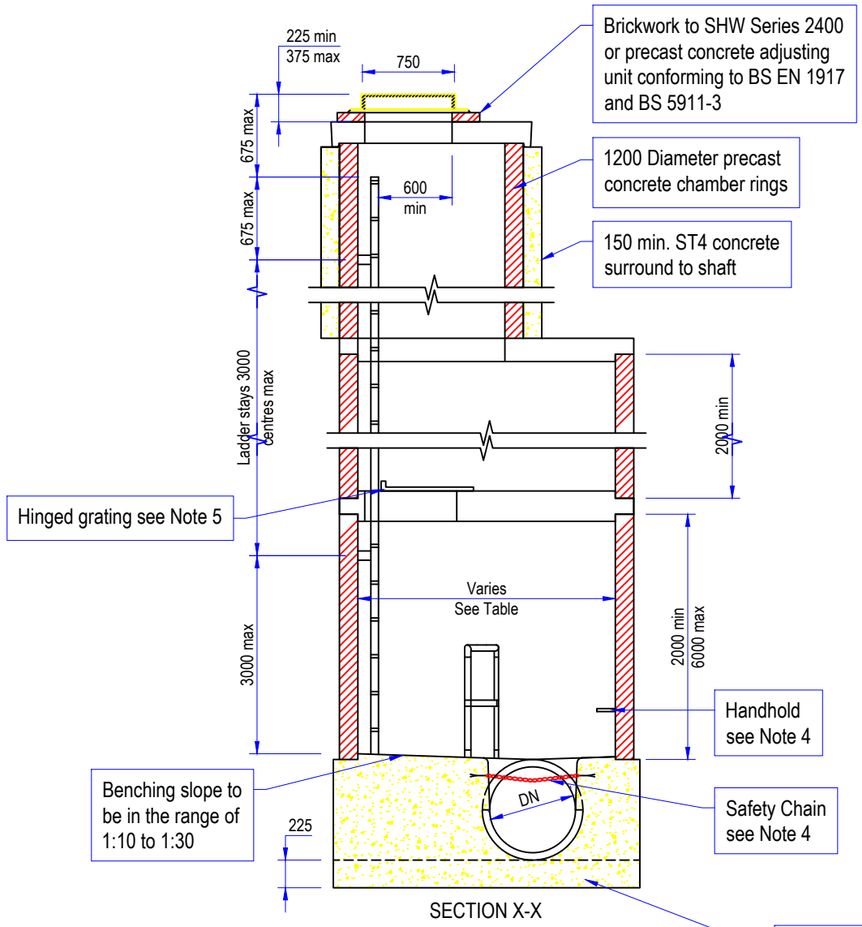

SECTION X-X

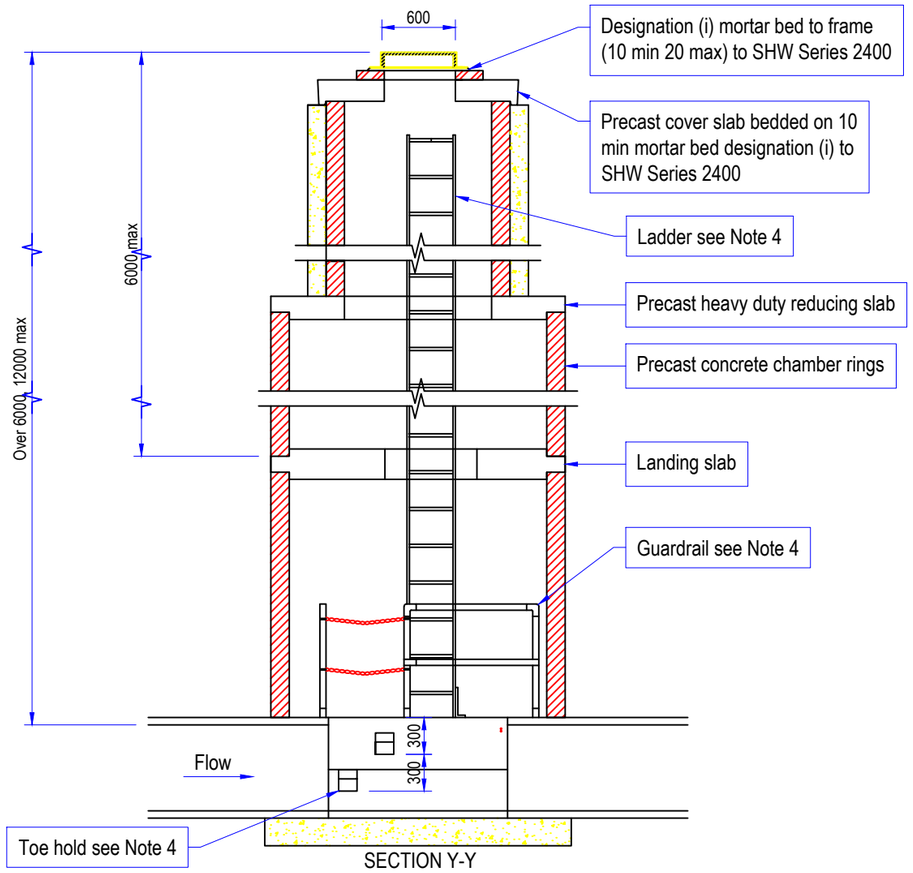

SECTION Y-Y

Integral in-situ ST4 concrete base walls benching & base slab with precast channel as shown or in-situ formed invert as alternative. Walls to extend 50 beyond outer faces or chamber ring. Alternatively precast concrete chamber rings may be bedded in mortar on an in-situ ST4 concrete base slab 300 greater in diameter than internal diameter of chamber rings.

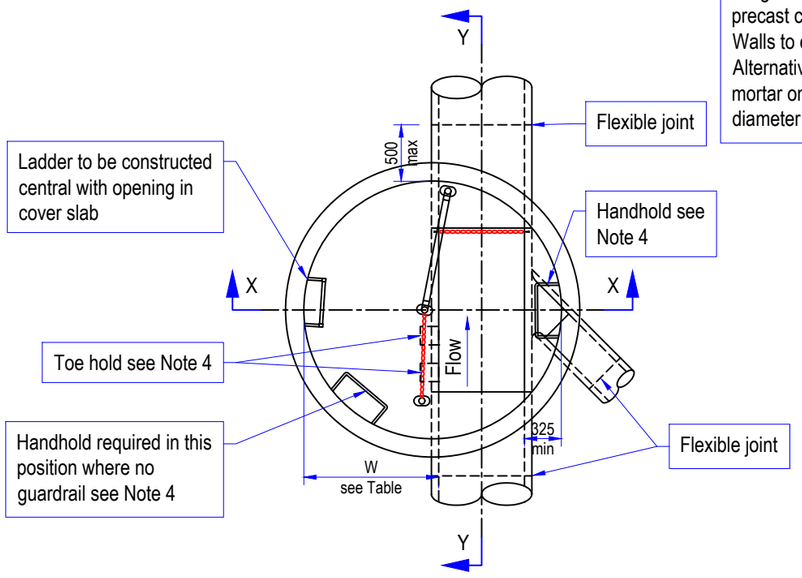

PLAN ON STRAIGHT INVERT
(Below reducing slab)

CHAMBER SUB-TYPE

Sub- Type	Minimum Chamber Ring Dia.	Max. Pipe DN	W	Guardrail Required	Safety Chain Required	Toe Hold Required
5a	1500	450	625	No	No	No
5b	1500	550	625	No	No	Yes
5c	2100	900	875	Yes	Yes	Yes

FOR PIPES 300 TO 900 DIAMETER.
DEPTHS 6000+ TO 12000 + PIPE DIAMETER

NOTES

1. All dimensions are in millimetres.
2. Chamber walls and cover slab to be constructed in precast concrete to BS EN 1917 and BS 5911-3.
3. Mortar to be designed to SHW Series 2400 (i)
4. Safety chain and guardrail required where outfall pipe is 600 diameter or greater. Toe hold and handhold required where outfall pipe is 500 diameter or greater.
   For details of ladder, safety chain and handhold see Drawing Number LBS-500-10. For details of the toe hold see Drawing Number LBS-500-27
5. For details of hinged grating see Drawing LBS-500-08
6. See SHW, sub-Clause 507.7 regarding backfilling/surround to chamber.
7. All ST concrete shall be to SHW, Clause 2602.

REV	DATE	REVISION DESCRIPTION / DETAILS	DRN BY	CHKD BY	APRVD BY

Southwark Council
southwark.gov.uk
160 TOOLEY STREET LONDON SE1P 5LX

PROJECT: SOUTHWARK STREETSCAPE DESIGN MANUAL STANDARD DETAILS

TITLE: TYPE 5 CHAMBER (PRECAST CONCRETE MANHOLE)

STATUS: DRAFT
SCALE: N.T.S.
DRAWN: SR
DESIGNED: -
CHECKED: GL
APPROVED: -
DRAWING NO: LBS/500/07
REV: R0
DATE DRAWN: JULY 2017
DATE ISSUED: 19 Feb 2019

S:\HIGHWAYS MAINTENANCE\SSDM\02-SSDM_CONTENT_ARCHIVE\REVISION OF SSDM\TECH DRWNS\TD DETAILS\SERIES 500\DRAINAGE & SERVICE DUCTS\DWGS\LBS-500-07 TYPE 5 CHAMBER (PRECAST CONCRETE MANHOLE).DWG