ISO FULL BLEED A3 420 X 297 MM
PRINTED ON ___% POST-CONSUMER RECYCLED CONTENT PAPER

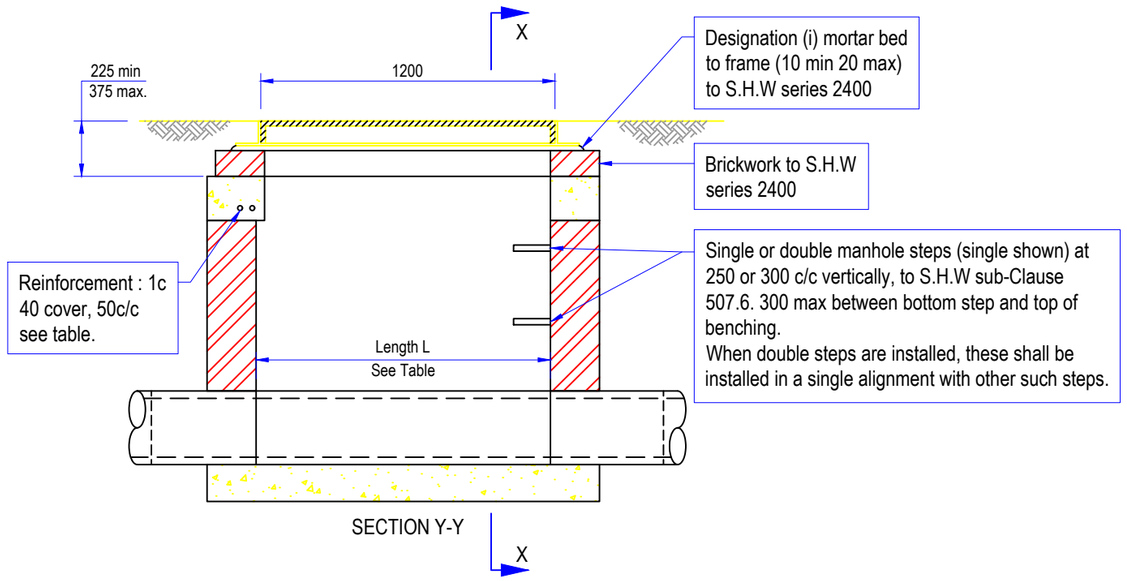

SECTION Y-Y

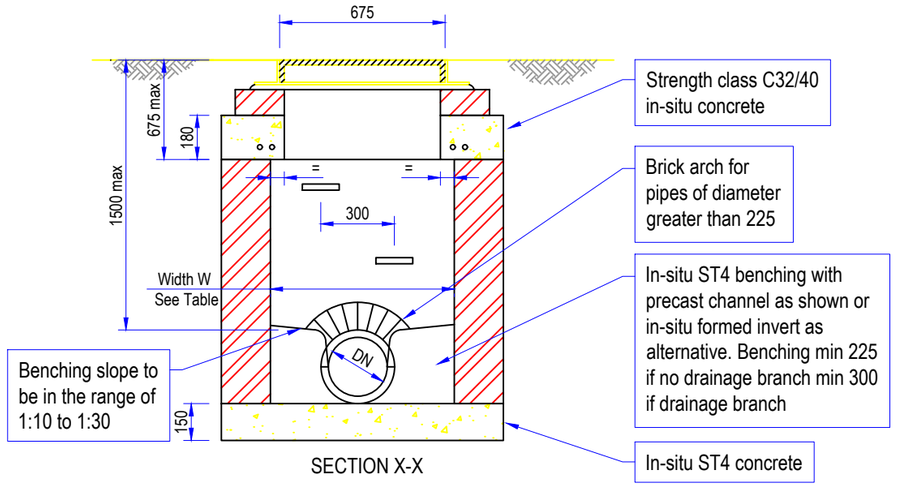

SECTION X-X

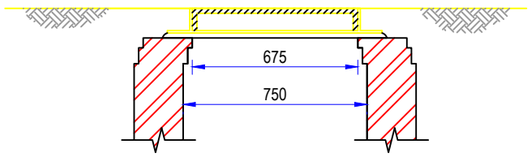

PERMITTED ALTERNATIVE COVER DETAIL FOR SUB-TYPE 1a

CHAMBER SUB-TYPE					
Sub-Type	Length L	Width W	Max. Pipe DN	Max. No. of Branches	Reinforcement T20 bars at 50 c/c
1a	1200	750	225	1 on either side	2 bars 1550 long
1b	1200	825	300	1 on either side	4 bars 1550 long
1c	1350	975	450	1 on either side	6 bars 1700 long 3 bars 1325 long

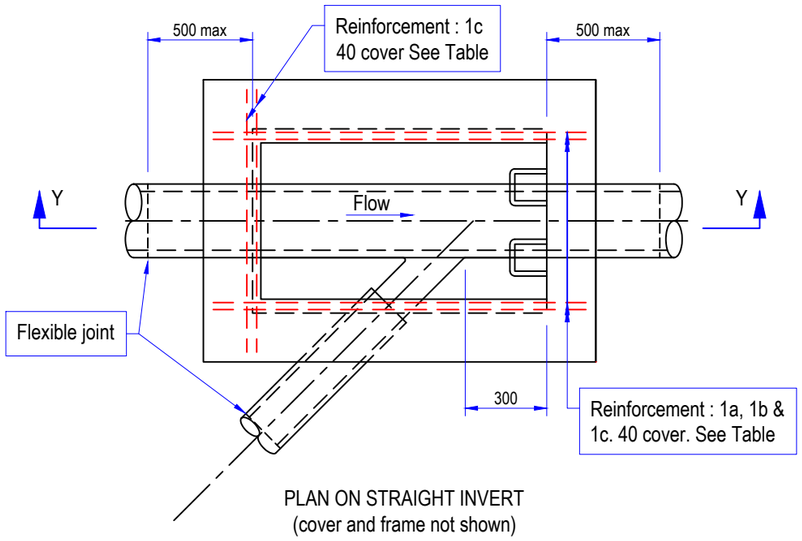

PLAN ON STRAIGHT INVERT
(cover and frame not shown)

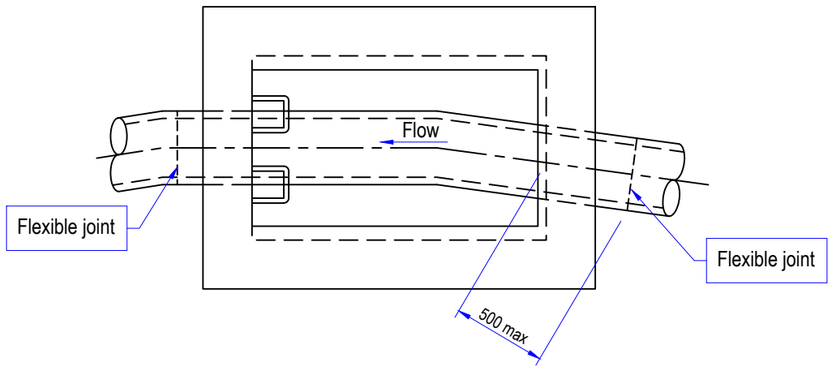

PLAN ON CURVED INVERT
(cover, frame and drainage branch are not shown)

FOR PIPES 450 MAX. DIAMETER
MAX. DEPTH 1500 + DIAMETER

NOTES

1. All dimensions in millimetres.
2. Chamber walls 225 thick to be constructed in class B clay engineering bricks to SHW Series 2400 in designation (i) mortar or in-situ ST4 concrete to SHW, Clause 2602.
3. See SHW, sub-Clause 507.7 regarding backfilling/surround to chamber.

REV	DATE	REVISION DESCRIPTION / DETAILS	DRN BY	CHKD BY	APRVD BY

Southwark Council
southwark.gov.uk
160 TOOLEY STREET LONDON SE1P 5LX

PROJECT: SOUTHWARK STREETSCAPE DESIGN MANUAL STANDARD DETAILS

TITLE: TYPE 1 CHAMBER (BRICK OR IN-SITU CONCRETE MANHOLE)

STATUS: DRAFT
DRAWN: SR
DESIGNED: -
SCALE: N.T.S.
CHECKED: GL
APPROVED: -
DRAWING NO: LBS/500/03
REV: R0
DATE DRAWN: JULY 2017
DATE ISSUED: 19 Feb 2019

S:\HIGHWAYS MAINTENANCE\SSDM\02-SSDM_CONTENT_ARCHIVE\REVISION OF SSDM\TECH DRWGS\STD DETAILS\SERIES 500 DRAINAGE & SERVICE DUCTS\DWG\LBS-500-03 TYPE 1 CHAMBER (BRICK OR IN-SITU CONCRETE MANHOLE).DWG